VARIABLE COMPRESSION MICA TRIMMERS AND PADDERS

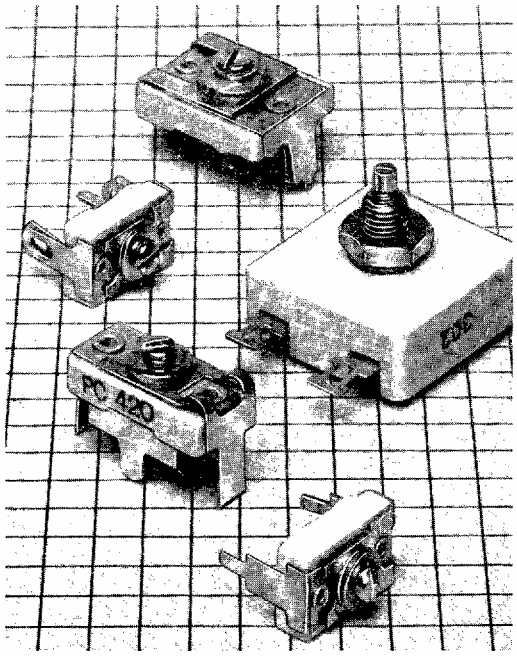

Specifications

OPERATING TEMPERATURE: −35°C to ±85°C.

MAXIMUM CAPACITANCE: Equal to, or greater than the value indicated in the table. When the adjusting screw is at a tight position (with tight being defined as 1¾ pound-inches). The maximum capacitance will be equal to or greater than the value indicated in the table.

MINIMUM CAPACITANCE: Equal to, or less than, the value indicated in the table. When the adjusting screw is rotated 3 turns from tight position, the maximum capacitance will be equal to or less than the value indicated in the table.

DC VOLTAGE:	Rated Voltage	Test Voltage
Type 30	250	500
Types 40, 42, 46	175	350
Type 30M	500	1000

INSULATION RESISTANCE at 25°C: 100,000 meg-ohms minimum.

Q at 1 MHz: See Q curve, Figure 1.

FIGURE 1
Q vs Capacitance (1 MHz)

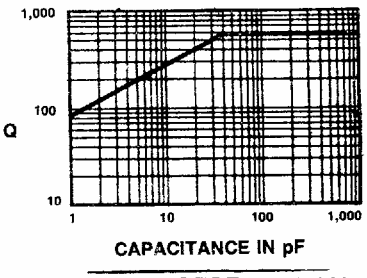

DISSIPATION FACTOR at 1 kHz: > 1000 pF Max; D.F. . 004 max.

CAPACITANCE CHANGE WITH TEMPERATURE at Working Point*:
TYPE 30: = ± (2.5% + 0.3 pF)
TYPE 40, 42, 46: = ± (1.5% + 0.3 pF)

CAPACITANCE DRIFT WITH TEMPERATURE at Working Point*:
TYPE 30: = ± (2.0% + 0.5 pF)
TYPE 40, 42, 46: = ± (1.5% +0.5 pF)

** Screw adjusted to ¼ to ½ turn from tight.*

STANDARD TRIMMERS

These variable compression mica trimming capacitors are produced by stacking mica dielectric capacitance units. A capacitor section consists of a thin film of mica between two spring loaded nonferrous metal conducting plates; the stacked units are mounted within a ceramic container, or on a ceramic base. By alternating metal plate, mica film, metal plate, etc., and paralleling these units, any desired capacitance within the physical limitations of the ceramic base can be achieved. A panhead adjusting screw (#2-64, UNS-2) thread for types 40 and 42 and a (#4-64, UNS-2) thread for type 46 is inserted through the center holes of the plates, the mica films, and the threaded bushing. This screw provides variable compression on the formed metal plates, varying the plate separation capacitance.

Arco trimming capacitors are treated for resistance to humidity and for permanence of capacity setting.

The base is made of the lowest loss ceramic dielectric available and the mica is clear India Ruby.

The soldering lugs may be bent in any position without affecting the capacitance setting.

Trimmers shown are standard sizes and capacities.

Standard dimensional adjustment tolerance is ± 1/32" or ± 3½°, whichever is applicable. Terminals having several lugs can be spotwelded together to prevent separation and flaring.

TYPE DESIGNATION

ST 0423
1 2

1) Mounting Style
   ST — Standard Bracket Mounting Style
   PC — Printed Circuit Mounting Style
   C — Variation of Printed Circuit Mounting Style
2) Indicates shape, construction, dimensions and capacitance.

Standard Range Trimmers

NOTE: All dimensions in inches.

Type 40 — MINIATURE TRIMMER
Voltage 350 VDCT — 175 VDCW

TYPE 40 PART NUMBER	GUARANTEED RANGE	
	At Tight Cap. Will Be More Than pF.	At 3 Turns Open Cap. Will Be Less Than pF.
400	7	2.5
402	20	4
403	45	5
404	55	12
405	90	16
406	115	25
407	285	55
408	340	90

Type 42 — MIDGET TRIMMER
Voltage 350 VDCT — 175 VDCW

TYPE 42 PART NUMBER	GUARANTEED RANGE	
	At Tight Cap. Will Be More Than pF.	At 3 Turns Open Cap. Will Be Less Than pF.
420	12	2.5
421	25	3.5
422	40	7
423	100	16
424	150	25
425	200	40
426	250	55
427	300	75
428	350	95
429	400	115
4210	450	130
4211	500	150
4212	550	170
4213	600	200
4214	650	220
4215	700	240

Type 46 — STANDARD TRIMMER
Voltage 350 VDCT — 175 VDCW

TYPE 46 PART NUMBER	GUARANTEED RANGE	
	At Tight Cap. Will Be More Than pF.	At 3 Turns Open Cap. Will Be Less Than pF.
460	15	3
461	30	5
462	80	10
463	180	20
464	280	45
465	380	75
466	480	105
467	580	140
468	680	175
469	790	215
4610	900	260
4611	1000	300
4612	1100	330
4613	1200	360
4614	1300	380
4615	1400	420

ST40

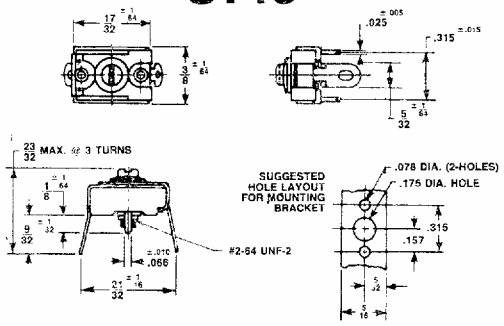

ST42

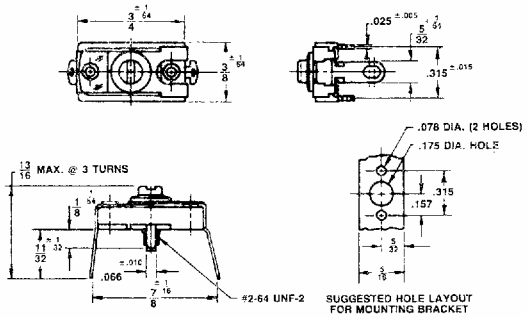

ST46

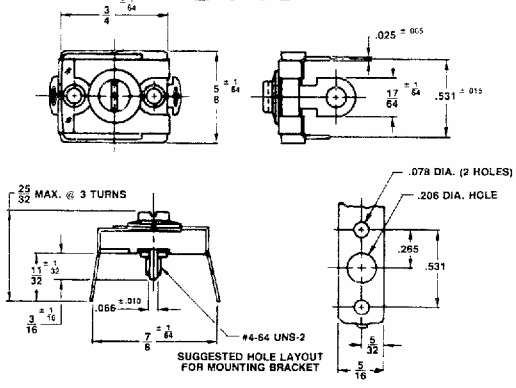

PC Style Printed Circuit Trimmers

"PC" TRIMMERS
The Arco trimmer capacitors, Types 40, 42, and 46, have been adapted for printed circuit techniques. Thus the holes in the terminal lugs are eliminated. The printed circuit terminals have greatly increased spring action, allowing the trimmer to be "snapped in" the printed circuit board and held firmly until soldered. The mounting lug portion of the trimmer has also been modified to facilitate positioning and support of the unit. Drawings of the trimmers and mounting layout are available upon request.

This printed circuit style is designated by the prefix letters "PC" preceding the regular part number. All values listed are available in the PC style.

"C" TRIMMERS
Type "C" trimmer is a "stand off" variation for printed circuit application. Instead of the raised staple, the Type "C" trimmer has .062" width notched terminals to raise the trimmer from the printed circuit board .125 inches. Designate type "C" by preceding the part number with the letter C.

Example: 426 trimmer in Type "C", would become C426.

PC40

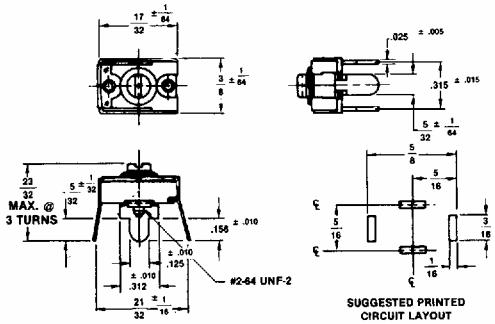

C40

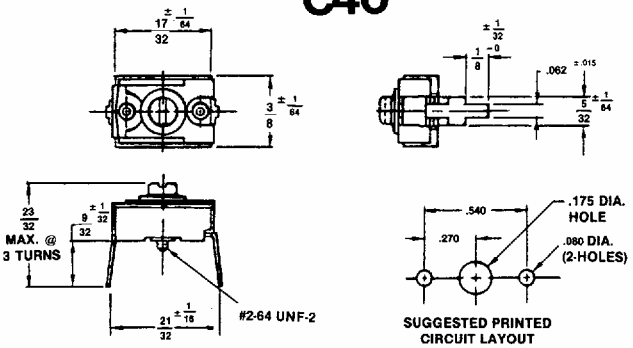

PC42

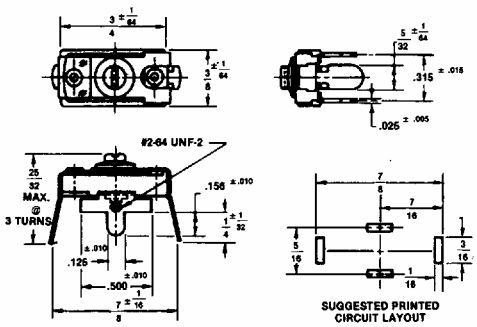

C42

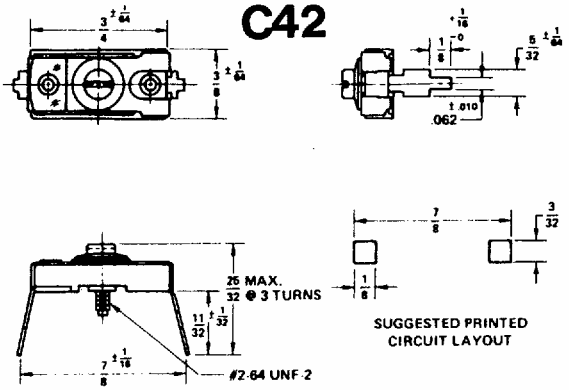

PC46

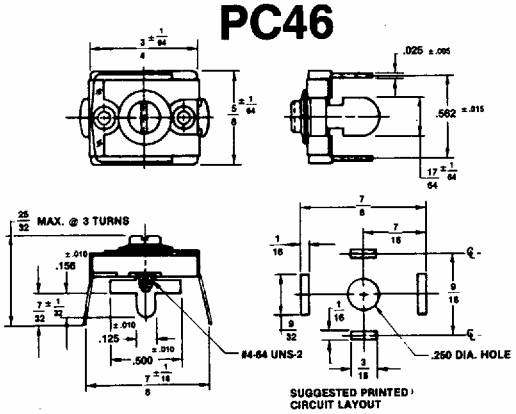

C46

